HOW TO MAKE MATTEL'S TOOT SWEET REAL CANDY WHISTLES

with Tiny Tootsie Roll candies in 4 flavors!

Made Exclusively for Mattel.

©1969 Mattel, Inc., All rights reserved. Printed in U.S.A.

4300-0920

IF YOUR TOOTSIE ROLLS SEEM HARD—SOFTEN THEM AS SHOWN IN BACK OF BOOK.

HOW TO MAKE A TOOT SWEET WHISTLE

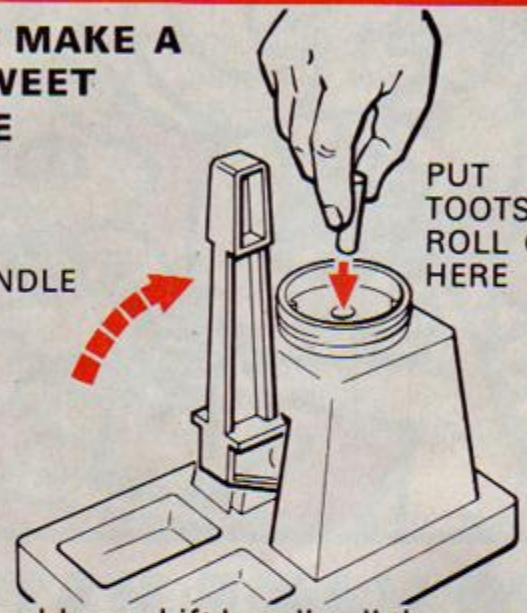

STEP **1**

Remove mold cap. Lift handle all the way up. Push Tootsie Roll candy all the way down into center hole.

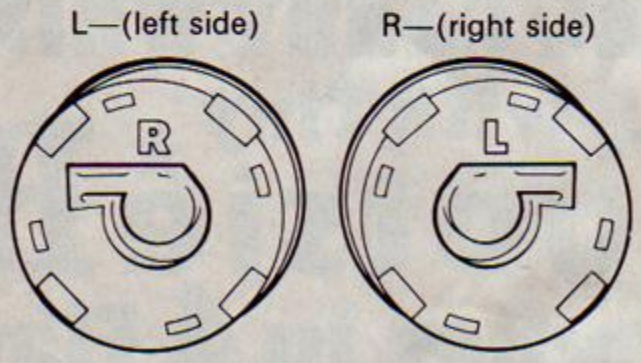

STEP **2**

You need two molds to make a whistle. One L—left side and one R—right side.

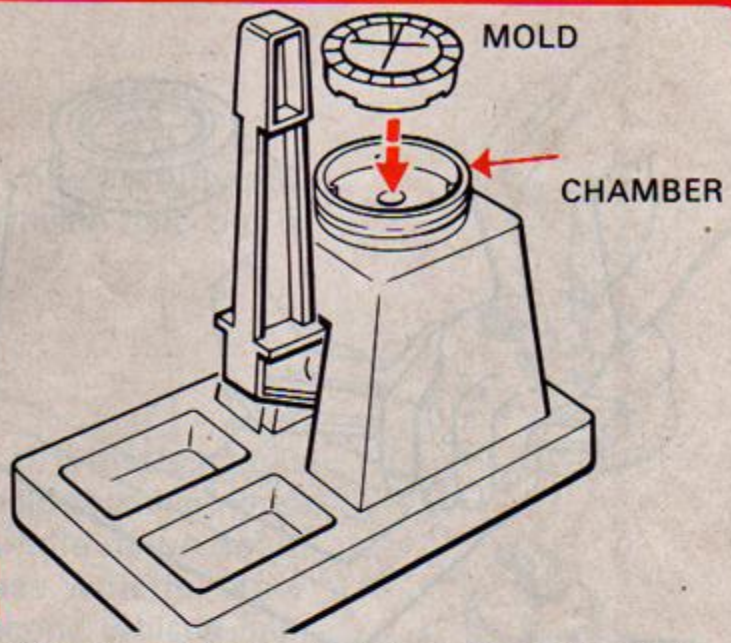

STEP **3**

Put **one** whistle-half mold in top of mold chamber. Twist mold 'til it falls into place.

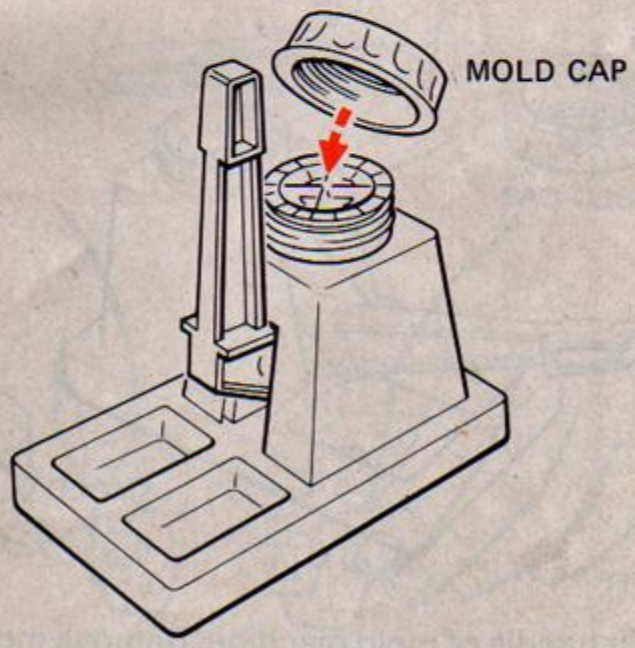

STEP **4**

Twist purple mold cap on tightly.

STEP **5**

Push handle down slowly... DO NOT JERK.

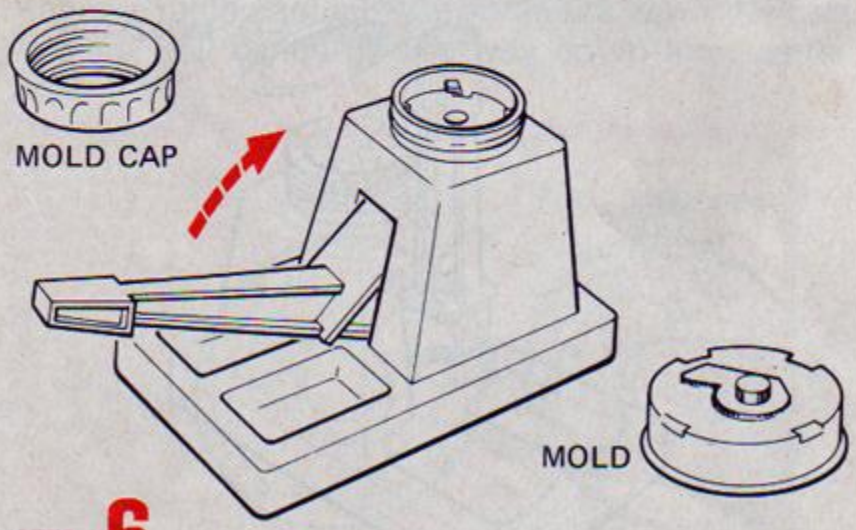

STEP **6**

Lift handle of mold machine. Remove mold cap and lift out whistle mold.

STEP **7**

Gently and carefully pull candy whistle half, out of mold.

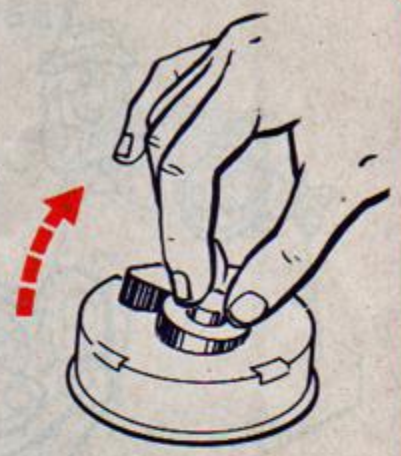

NOTE: If whistle sticks inside mold chamber: Press mold handle down again to release whistle. Now mold second whistle half, the same way with other half of whistle mold.

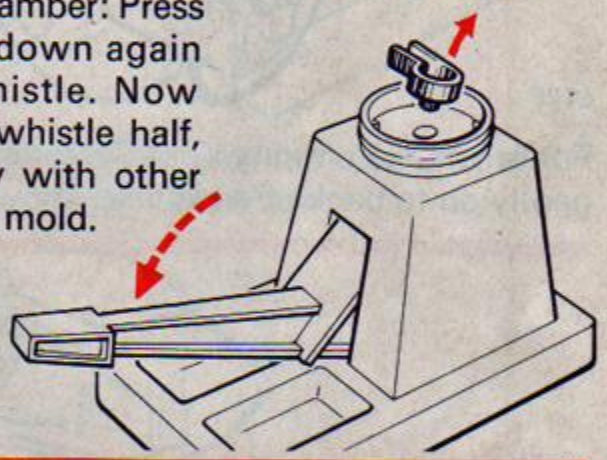

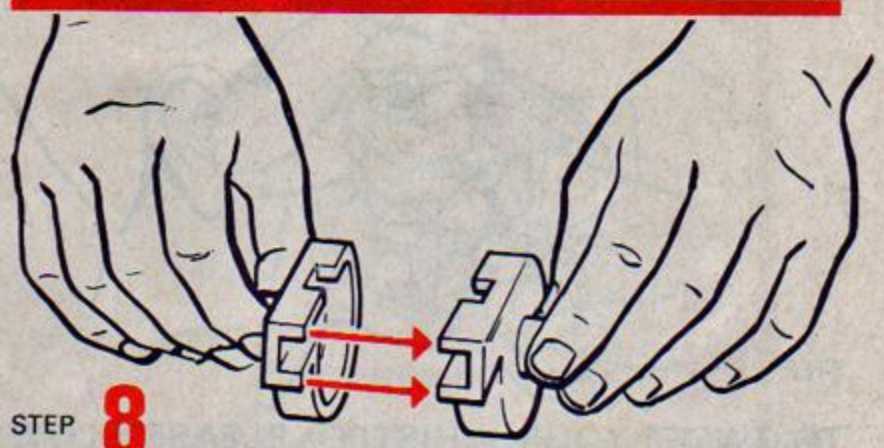

STEP **8**

Press the 2 whistle halves together gently.

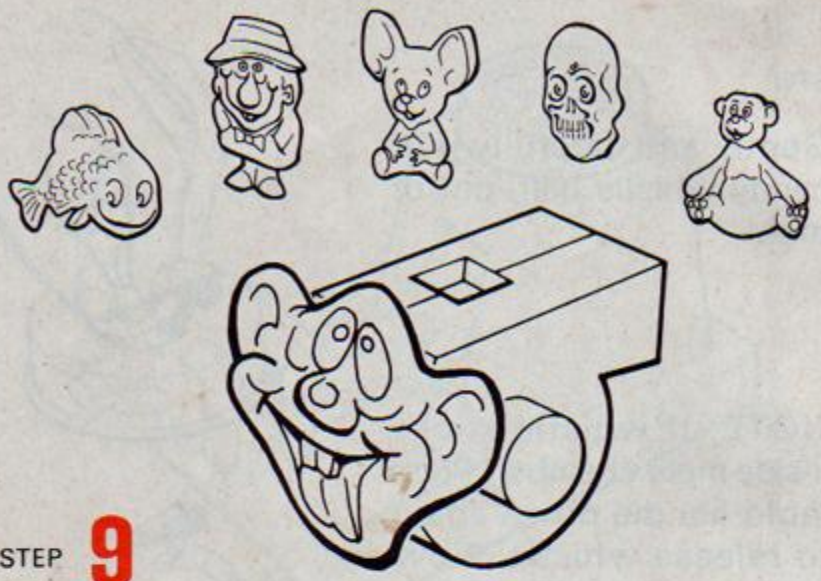

STEP **9**

For fun, make a funny Toot Sweet character. Press gently on to back of whistle as shown.

STEP **10**

TO TWEET YOUR WHISTLE—PLEASE BLOW HARD!

HOW TO CLEAN TOOT SWEET TASTITOY™ MACHINE

ALL PARTS ARE WASHABLE, EXCEPT BASE. BASE MAY BE WIPED WITH A DAMP CLOTH.

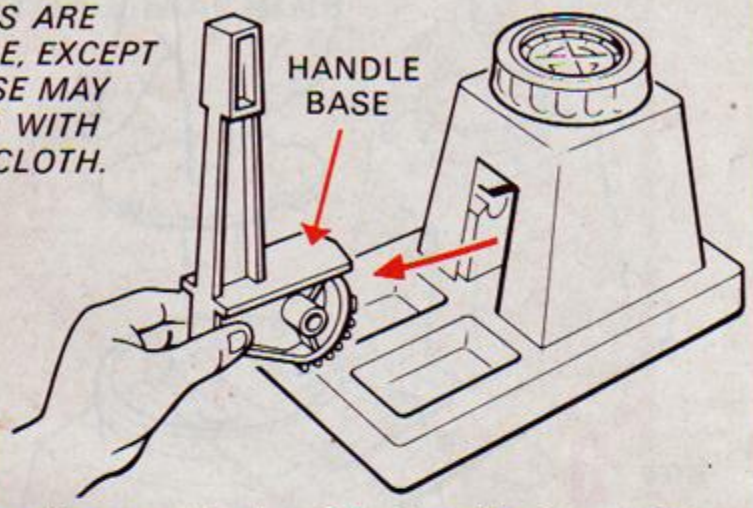

STEP **1**

Raise handle completely. Grip handle base with fingers and pull up and out as shown.

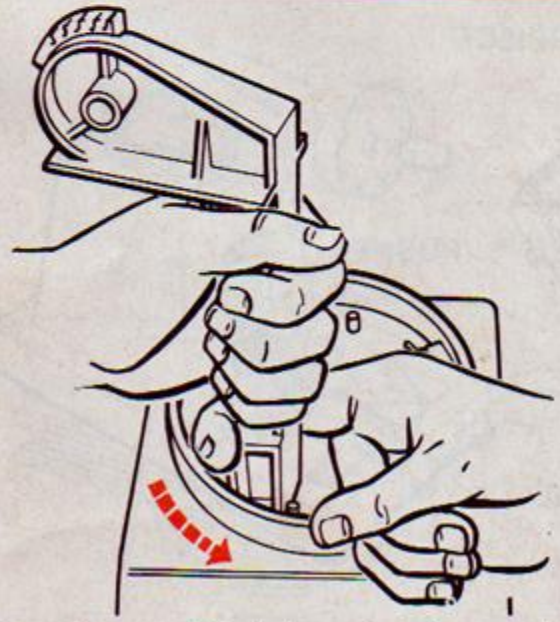

STEP **2**

Twist off purple cap. Twist centerpiece to left with handle as shown to unlock.

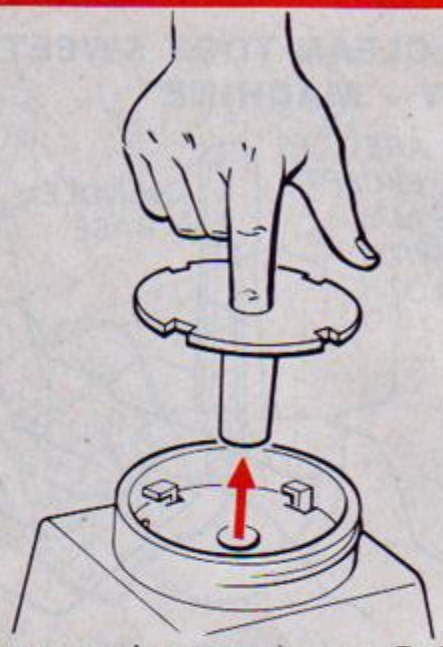

STEP **3**

Put finger into centerpiece as shown. Pull centerpiece out of machine.

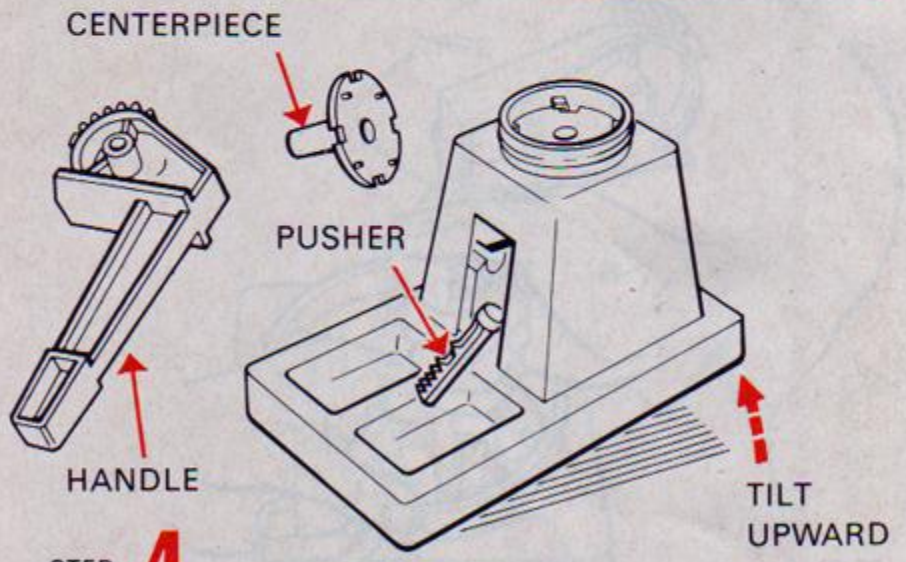

STEP **4**

Tilt machine forward slightly and pull pusher out of front. Wash and dry parts.

HOW TO REASSEMBLE TOOT SWEET TASTITOY™ MACHINE

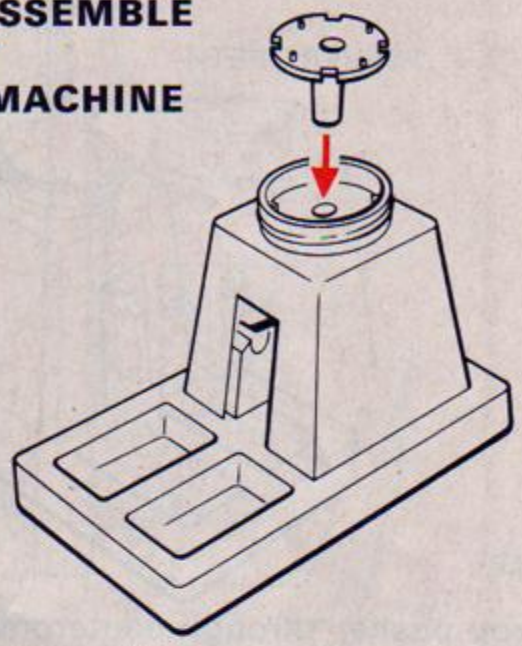

STEP **1**

Put centerpiece into machine.

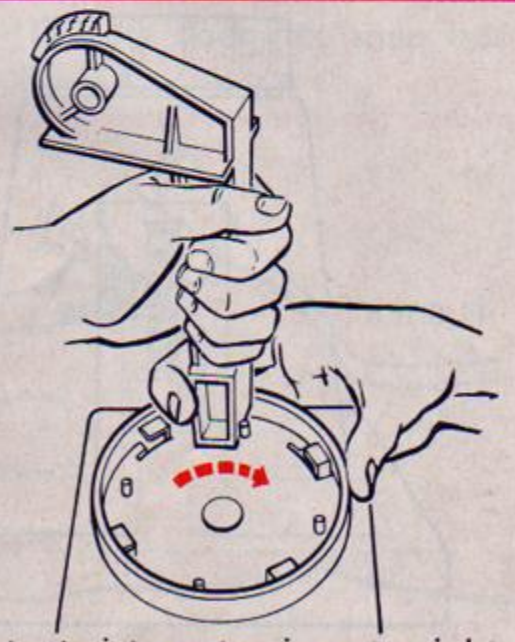

STEP **2**

Use handle to twist centerpiece to right until it snaps into place.

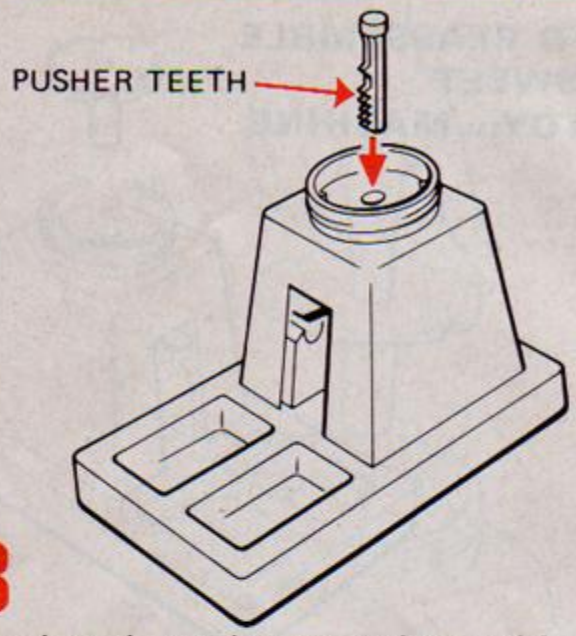

STEP **3**

Drop pusher through centerpiece with "teeth" facing front. Replace mold cap.

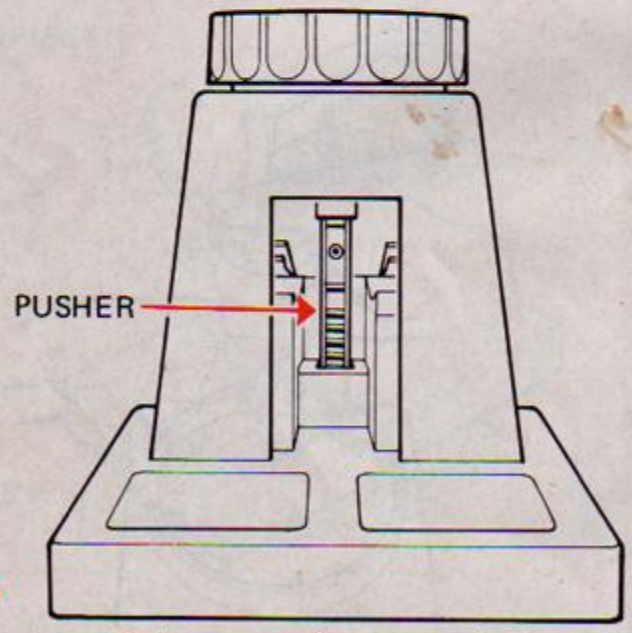

STEP **4**

Press pusher all the way down to the bottom of machine.

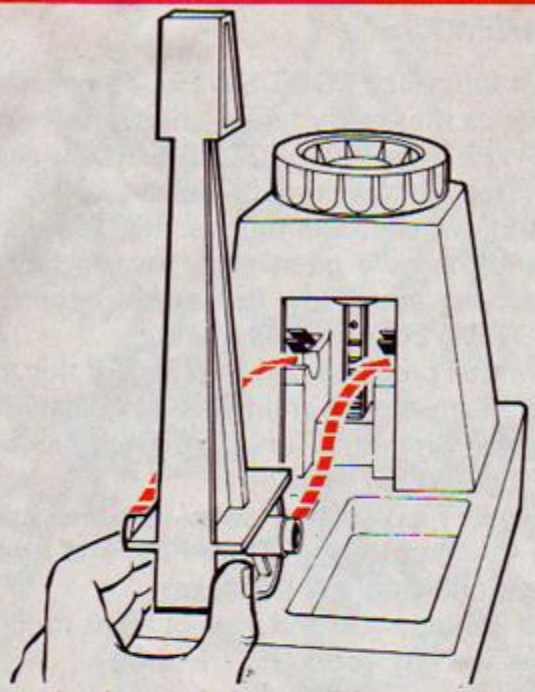

STEP **5**

Handle must be in upright position as shown. Push handle straight into front of machine. Handle snaps into place. If handle does not snap into place, repeat Steps 3 and 4.

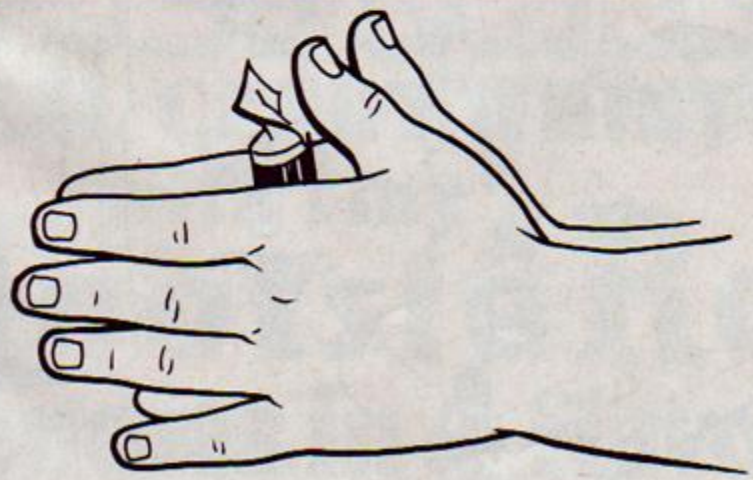

If your Tootsie Roll candy seems hard, you can roll it in your hands as shown to soften.

DEAR PARENTS:

We'd like to introduce TOOT SWEET—a new way to make candy whistles that really tweet—and... taste neat!

TOOT SWEET uses tiny TOOTSIE ROLL candies made exclusively for Mattel, in four delicious flavors to make whistles and whistle decorations. It's easy, safe fun for children, and makes a great party toy! In fact, your child can have a party every day, first making, then sharing the fun of TOOT SWEET with his friends.

Like all Mattel products, every aspect of this toy has been carefully child-tested so children will quickly learn to use it successfully. Share the fun as you help your child make his first TOOT SWEET whistle!

TOOT SWEET is another safe, durable, workable toy, backed by the engineering know-how and quality reputation of the world's largest toymaker.

We hope it brings you and your child as much happiness in its use as we enjoyed in its creation.

MATTEL, INC. TOYMAKERS

CONTENTS

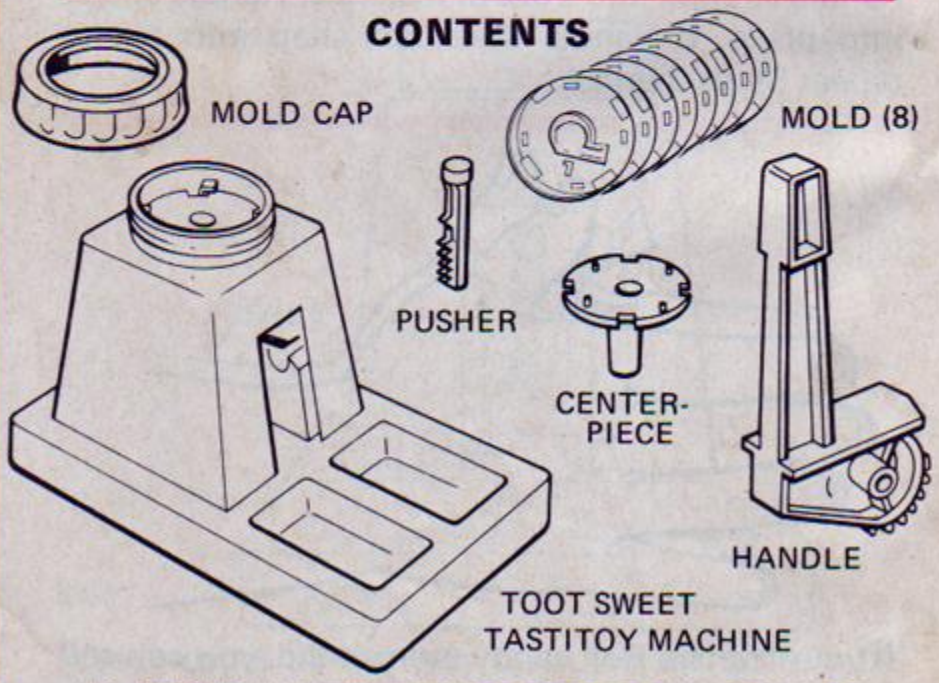

40 PIECES MATTEL TINY TOOTSIE ROLL CANDIES

IMPORTANT:

FOR BEST RESULTS WITH MATTEL'S TOOT SWEET

Use the chocolate Tootsie Roll Candies in this toy to make whistles. Use the other flavors to make the whistle trims.

The Tiny Tootsie Roll candies in this toy make the best whistles when they are at "room temperature"—around 70°.

IF they are not round enough to fit in the machine: Just roll them—with the wrapper on—between your hands to round them off.

IF they seem too fresh and soft: Put them in your refrigerator for 5-10 minutes.

Please check STEP 6 in the INSTRUCTION BOOKLET. We have since found that it is better to leave the handle down until after mold cap and mold are removed from machine.

Please refer to STEP 7 in the INSTRUCTION BOOKLET. If whistle sticks inside mold chamber: Pump mold handle up and down a few times to release whistle.

©1969 Mattel, Inc. Printed in U.S.A.

4300-1110